# HydroTap Elite Plus BCS Tap

Product Spec Sheet

## HydroTap Elite Plus Boiling/Chilled/Sparkling (BCS) Tap

Offering the choice of instant filtered boiling, chilled and sparkling water, the minimalist and understated look and the streamlined design and clean lines of the HydroTap Elite Plus are sure to please.

This HydroTap Elite Plus can be installed over the sink as a secondary tap or over our optional Classic Plus Range Integrated or Classic Plus Range Raised Font / Drip Tray.

The HydroTap Elite Plus is available in six finishes: Chrome, Brushed Chrome, Matte Black, Brushed Gold, Brushed Nickel and Gunmetal.

## HydroTap Elite Plus BCS Tap - Available Finishes

Chrome

Brushed Chrome

Matte Black

Brushed Gold

Brushed Nickel

Gunmetal

## Product Order Codes for HydroTap Elite Plus BCS Taps

| | |
|---|---|
| HydroTap Elite Plus BCS Tap in Chrome | 01043222 |
| HydroTap Elite Plus BCS Tap in Brushed Chrome | 01043477 |
| HydroTap Elite Plus BCS Tap in Matte Black | 01043478 |
| HydroTap Elite Plus BCS Tap in Brushed Gold | 01043479 |
| HydroTap Elite Plus BCS Tap in Brushed Nickel | 01043481 |
| HydroTap Elite Plus BCS Tap in Gunmetal | 01043480 |

# HydroTap Elite Plus BCS Tap

Product Spec Sheet

## Installation Requirements

The HydroTap is a pump-driven system so the installation of the Tap must be within 3' (0.9m) of the base command center. Installation on most countertops is straightforward however, some stone countertops may require a specialized cutting service.

If using a drip tray (font) accessory, suitable drainage to a trapped waste is required within 3' (0.9m) of the installation. Sufficient space and clearance to install the HydroTap as detailed in the product installation guidelines is required.

Installation and connection of your HydroTap must be carried out by a qualified person, observing all local, state, & federal regulations.

## HydroTap Elite Plus BCS - Tap Specs

| | |
|---|---|
| **Style:** | HydroTap Elite Plus Tap (BCS) - includes boiling water safety lock |
| **Hole Size:** | 1 - 3/8" / 35mm |
| **Tap Height:** | 8 11/16" (221mm) or 14" (356mm) when installed with an optional font / drip tray |
| **Installation:** | Over sink as a secondary tap or on optional font / drip tray |
| **Flow Rate:** | Max 1.8gpm / 6.8lpm |
| **Sparkling Water Flow Rate** | 0.4 gpm / 1.51lpm |
| **Product Certifications:** | IAPMO - NSF/ANSI 372, 42, 53, CSA B438.1, ASSE 1023, ASSE 1087; cUL; CEC |
| **ADA Compliant:** | Yes |

Elite Plus - Tap View

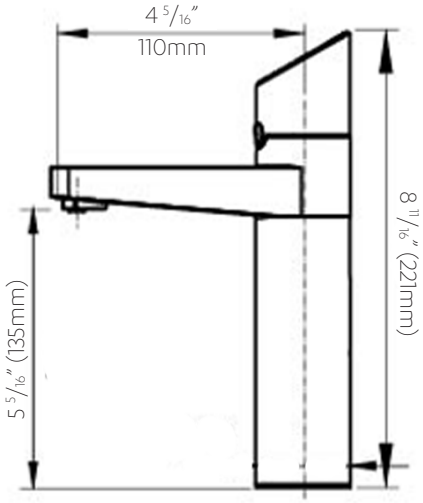


Elite Plus with Raised Font

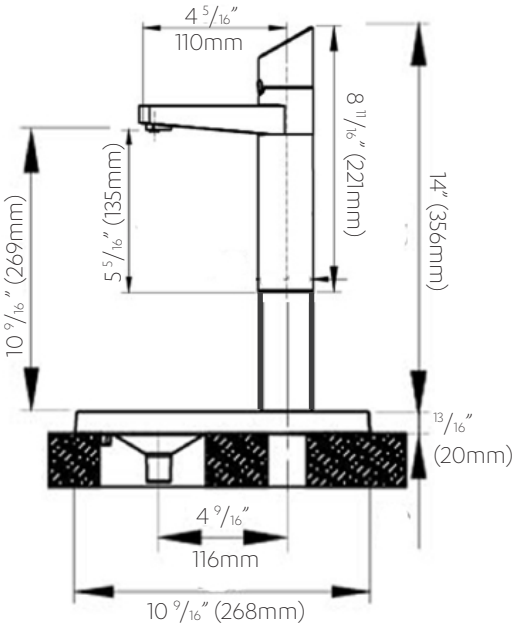


Elite Plus with Integrated Font

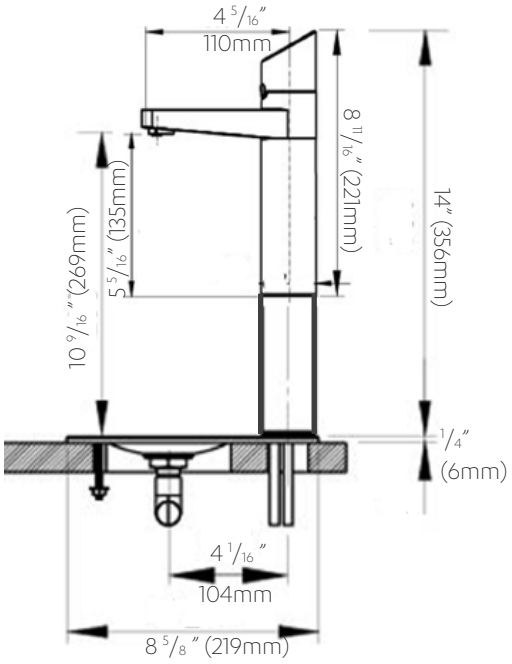

# HydroTap 120V BCS G5 Kitted Command Center

Product Spec Sheet

## HydroTap 120V BCS G5 Command Center kitted with 1.5lb $CO_2$ and Regulator

Product Order Code: 01048497

The HydroTap by Zip Water is more than just a water system, it's cooking made easy, it's sparkling water on-demand and it's a crisp glass of chilled water. That's because the HydroTap 120V BCS command center provides users instant access to filtered boiling, chilled and sparkling water.

This command center is kitted with our 1.5lb $CO_2$ (2 cylinders) + $CO_2$ regulator. This kit ideal for residential and small commercial applications and can be paired with any of our various tap styles.

## HydroTap 120V BCS G5 Command Center - Product Specs

| | |
|---|---|
| **Product Order Code** | 01048497 |
| **Water Pressure:** | Min 37psi – Max 100psi (2.60 - 7.03kg/cm$^2$) with a minimum flow rate of 1 gpm (3.79lpm) |
| **Water Connection:** | ½" BSP - isolation valve is required within 3' (0.9m) of the installation |
| **Integral Water Values:** | All HydroTap systems are fitted with a Dual Check Valve and a 50psi (3.52kg/cm$^2$) Pressure Limiting Valve |
| **Water Supply Requirements:** | Potable drinking water supply |
| **Optimal Total Dissolved Solids (TDS) Range:** | TDS Min 50ppm – Max 150ppm |
| **Integral Water Filter:** | 0.2 micron, 1 size - replace every 1,100 gallons / 4,163 liters or 12 months |
| **Power Rating:** | 110-120V, 50-60Hz, 15 amp power supply with a NEMA 5-15 outlet |
| **Dimensions (WxDxH):** | 13.3" x 18.2" x 13.1" / 339mm x 462mm x 333mm |
| **Minimum Air Gap:** | Minimum of 2" / 50mm clearance on left and right side and 8" / 200mm above |
| **Minimum Cabinet Size:** | 20" wide x 24" deep / 508mm wide x 610mm deep |
| **Maximum Hose Connection Length** | 3' / 0.9m (tap to command center) |
| **Minimum Distance Needed for Installation** | 15" / 381mm (interior wall to garbage disposal) |
| **Dry Weight:** | 75lbs / 34kg |
| **Product Approvals:** | IAPMO - NSF/ANSI 372, 42, 53, CSA B483.1, ASSE 1023, ASSE 1087; cUL; CEC |
| **Warranty:** | 2-year limited parts and labor warranty |
| **Included $CO_2$ Cylinder:** | Zip Water 1.5lb $CO_2$ (includes 2 cylinders) with CGA-320 fitting + $CO_2$ regulator |
| **$CO_2$ Operating Pressure:** | Min 39psi - Max 44psi / Min 2.74 - Max 3.09kg/cm$^2$ |

# HydroTap 120V BCS G5 Command Center

Product Spec Sheet

## Installation Requirements

Installation and connection of your HydroTap must be carried out by a qualified person, observing all local, state, & federal regulations. You will require suitable 110 -120V 50-60Hz, 15 amp power supply with a NEMA 5-15 electrical outlet within 5’ 9” (1.75m) of the product.

The HydroTap is a pump-driven system so the installation of the Tap must be within 3’ (0.9m) of the base command center. The HydroTap is an air-cooled system so discrete cabinetry cut-outs are required for ventilation. Installation on most countertops is straightforward however, some stone countertops may require a specialized cutting service.

If using a drip tray (font) accessory, suitable drainage to a trapped waste is required within 3’ (0.9m) of the installation. If you live in an area with hard water (more than 150ppm), we recommend installation of a scale filtration kit or a water softener. Sufficient space and clearance to install the HydroTap as detailed in the product installation guidelines is required.

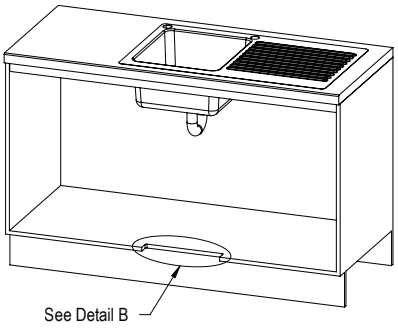


**VENTILATION DETAIL**

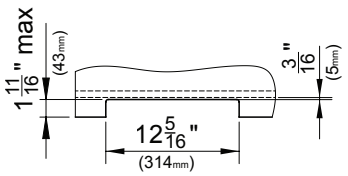


**DETAIL B: CABINET FLOOR CUT-OUT**

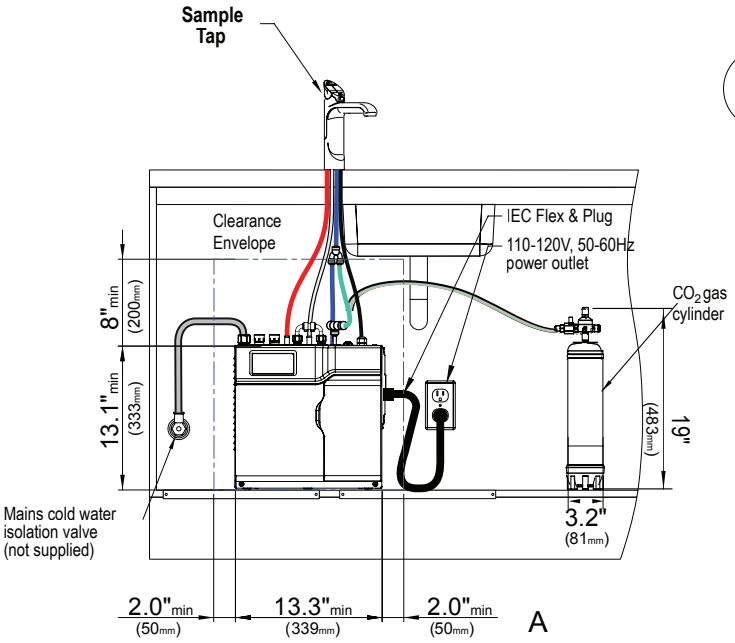


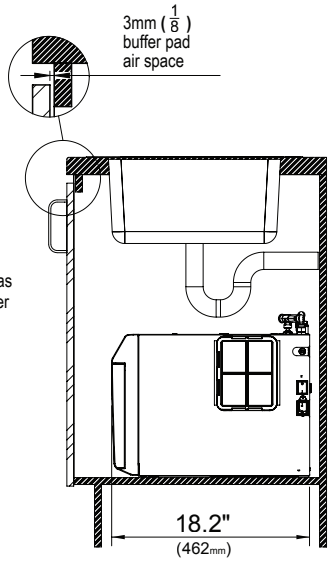


Scan QR code to view installation guide.

Installation by Zip Professional Service is available in select metro areas and can be arranged with a phone call to 1-833-233-2358 or by emailing wecare@na.zipwater.com. Technical Installation assistance over phone or video call can be obtained by calling our customer care line at 833-233-2358, Monday through Friday 8am - 5pm Central Time.

# 1.5lb $CO_2$ Cylinder + Regulator

Detailed Spec Sheet

## 1.5lb $CO_2$ Cylinder and $CO_2$ Regulator - Product Specs
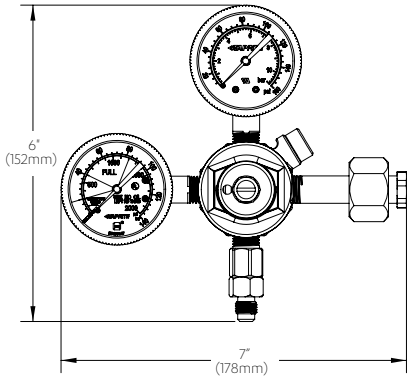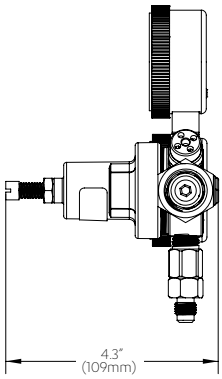
| | |
|---|---|
| **Product Description:** | 2 x 1.5lb Beverage-Grade Carbon Dioxide Cylinder with Regulator |
| **$CO_2$ Capacity:** | Approximately 400 8oz cups (per canister) |
| **$CO_2$ Operating Pressure:** | Min 39psi - Max 43psi / Min 2.74 - Max 3.02kg/$cm^2$ |
| **$CO_2$ Height (without regulator):** | Approximately 12" / 305mm |
| **$CO_2$ Diameter:** | Approximately 3.2" / 81mm |
| **$CO_2$ Regulator Height:** | Approximately 6" / 152mm |
| **$CO_2$ Regulator Width:** | Approximately 7" / 178mm |
| **$CO_2$ Regulator Depth:** | Approximately 4.3" / 109mm |
| **Valve Type:** | CGA-320 |
| **Max Height (with regulator)** | Approximately 19" / 482mm |
| **Max Width (with regulator):** | Approximately 6" / 152mm |
| **Storage Temperature:** | $CO_2$ should be stored out of direct sunlight.<br>Max storage temperature is 120°F (48.8°C) |