HydroTap Cube BCS Tap

Product Spec Sheet

HydroTap Cube Boiling/Chilled/Sparkling (BCS) Tap

Elevate your home hydration with the HydroTap Cube BCS Tap and enjoy instant access to filtered boiling, chilled and sparkling water from the tap.

The HydroTap Cube offers a contemporary twist on a classic with its angular square shape which is softened by its rounded corners.

This tap style can be installed over the sink as a secondary tap or over our optional design range font/drip tray. The HydroTap Cube tap is available in seven different finishes from a classic chrome to a modern gunmetal.

HydroTap Cube BCS Tap - Available Finishes

Chrome

Brushed Chrome

Matte Black

Brushed Gold

Nickel

Brushed Nickel

Gunmetal

Product Order Codes for HydroTap Cube BCS Taps

HydroTap Cube BCS Tap in Chrome	01034238
HydroTap Cube BCS Tap in Brushed Chrome	01034239
HydroTap Cube BCS Tap in Matte Black	01034240
HydroTap Cube BCS Tap in Brushed Gold	01034242
HydroTap Cube BCS Tap in Nickel	01034243
HydroTap Cube BCS Tap in Brushed Nickel	01034244
HydroTap Cube BCS Tap in Gunmetal	01041863

HydroTap Cube BCS Tap

Product Spec Sheet

Installation Requirements

The HydroTap is a pump-driven system so the installation of the Tap must be within 3' (0.9m) of the base command center. Installation on most countertops is straightforward however, some stone countertops may require a specialized cutting service.

If using a drip tray (font) accessory, suitable drainage to a trapped waste is required within 3' (0.9m) of the installation. Sufficient space and clearance to install the HydroTap as detailed in the product installation guidelines is required.

Installation and connection of your HydroTap must be carried out by a qualified person, observing all local, state, & federal regulations.

HydroTap Cube BCS - Tap Specs

Style:	HydroTap Cube Tap (BCS) - includes boiling water safety lock
Hole Size:	1 - 3/8" / 35mm
Tap Height:	12 13/16" (326mm) fixed height from counter to apex of spout (when installed over a drain font); 10 7/8" (276mm) and 12 13/16" (326mm) adjustable height (when installed over sink)
Installation:	Over sink as a secondary tap or on optional font/drip tray; Handle orientation - left or right side
Flow Rate:	Max 1.8gpm / 6.8lpm
Sparkling Water Flow Rate	0.4 gpm / 1.51lpm
Product Certifications:	IAPMO - NSF/ANSI 372, 42, 53, CSA B4438.1, ASSE 1023, ASSE 1087; cUL; CEC
ADA Compliant:	Yes

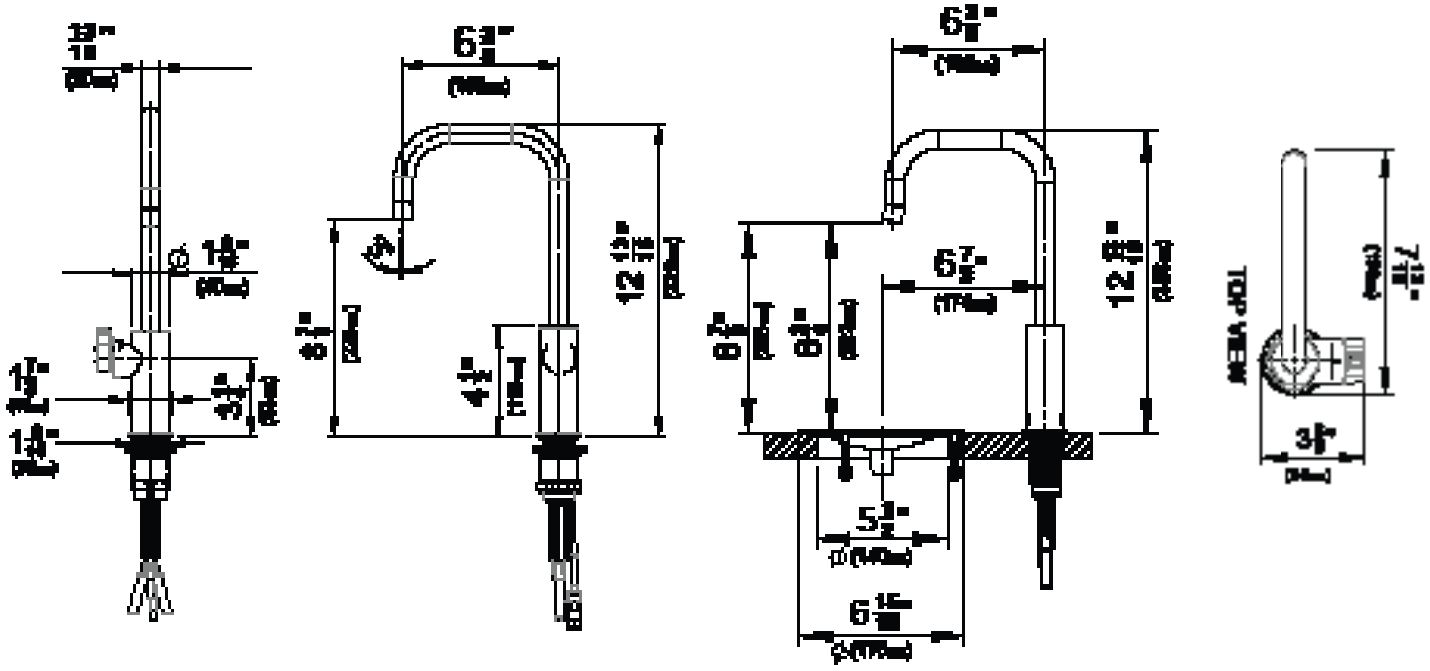

FRONT VIEW RHS VIEW FONT VIEW

HydroTap 120V BCS G5 Kitted Command Center

Product Spec Sheet

HydroTap 120V BCS G5 Command Center kitted with 1.5lb CO_2 and Regulator

Product Order Code: 01048497

The HydroTap by Zip Water is more than just a water system, it's cooking made easy, it's sparkling water on-demand and it's a crisp glass of chilled water. That's because the HydroTap 120V BCS command center provides users instant access to filtered boiling, chilled and sparkling water.

This command center is kitted with our 1.5lb CO_2 (2 cylinders) + CO_2 regulator. This kit ideal for residential and small commercial applications and can be paired with any of our various tap styles.

HydroTap 120V BCS G5 Command Center - Product Specs

Product Order Code	01048497
Water Pressure:	Min 37psi – Max 100psi (2.60 - 7.03kg/cm^2) with a minimum flow rate of 1 gpm (3.79lpm)
Water Connection:	½" BSP - isolation valve is required within 3' (0.9m) of the installation
Integral Water Values:	All HydroTap systems are fitted with a Dual Check Valve and a 50psi (3.52kg/cm^2) Pressure Limiting Valve
Water Supply Requirements:	Potable drinking water supply
Optimal Total Dissolved Solids (TDS) Range:	TDS Min 50ppm – Max 150ppm
Integral Water Filter:	0.2 micron, 1 size - replace every 1,100 gallons / 4,163 liters or 12 months
Power Rating:	110-120V, 50-60Hz, 15 amp power supply with a NEMA 5-15 outlet
Dimensions (WxDxH):	13.3" x 18.2" x 13.1" / 339mm x 462mm x 333mm
Minimum Air Gap:	Minimum of 2" / 50mm clearance on left and right side and 8" / 200mm above
Minimum Cabinet Size:	20" wide x 24" deep / 508mm wide x 610mm deep
Maximum Hose Connection Length	3' / 0.9m (tap to command center)
Minimum Distance Needed for Installation	15" / 381mm (interior wall to garbage disposal)
Dry Weight:	75lbs / 34kg
Product Approvals:	IAPMO - NSF/ANSI 372, 42, 53, CSA B483.1, ASSE 1023, ASSE 1087; cUL; CEC
Warranty:	2-year limited parts and labor warranty
Included CO_2 Cylinder:	Zip Water 1.5lb CO_2 (includes 2 cylinders) with CGA-320 fitting + CO_2 regulator
CO_2 Operating Pressure:	Min 39psi - Max 44psi / Min 2.74 - Max 3.09kg/cm^2

HydroTap 120V BCS G5 Command Center

Product Spec Sheet

Installation Requirements

Installation and connection of your HydroTap must be carried out by a qualified person, observing all local, state, & federal regulations. You will require suitable 110 -120V 50-60Hz, 15 amp power supply with a NEMA 5-15 electrical outlet within 5’ 9” (1.75m) of the product.

The HydroTap is a pump-driven system so the installation of the Tap must be within 3’ (0.9m) of the base command center. The HydroTap is an air-cooled system so discrete cabinetry cut-outs are required for ventilation. Installation on most countertops is straightforward however, some stone countertops may require a specialized cutting service.

If using a drip tray (font) accessory, suitable drainage to a trapped waste is required within 3’ (0.9m) of the installation. If you live in an area with hard water (more than 150ppm), we recommend installation of a scale filtration kit or a water softener. Sufficient space and clearance to install the HydroTap as detailed in the product installation guidelines is required.

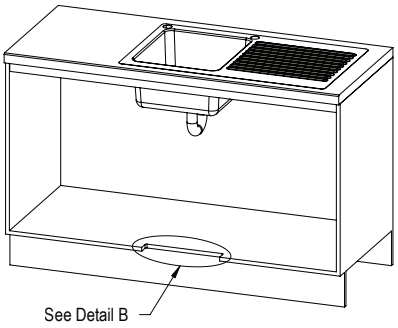

VENTILATION DETAIL

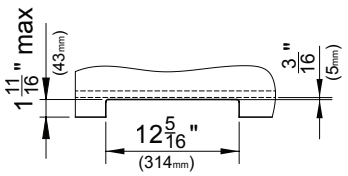

DETAIL B: CABINET FLOOR CUT-OUT

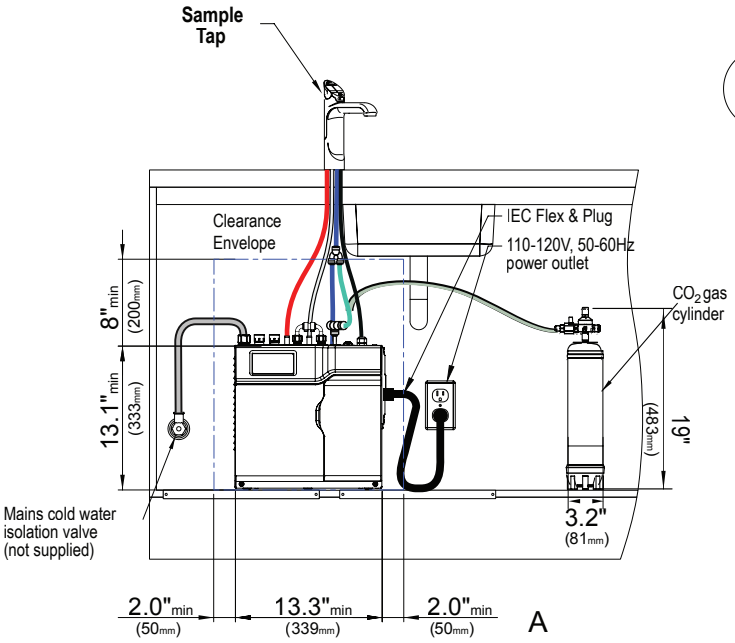

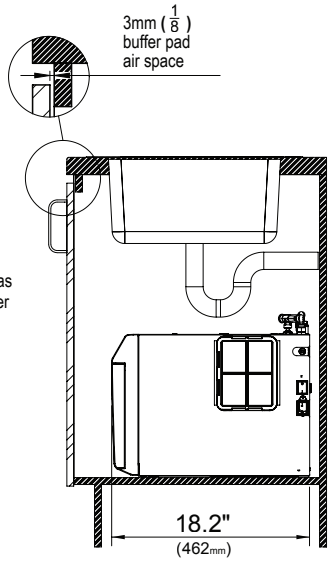

Scan QR code to view installation guide.

Installation by Zip Professional Service is available in select metro areas and can be arranged with a phone call to 1-833-233-2358 or by emailing wecare@na.zipwater.com. Technical Installation assistance over phone or video call can be obtained by calling our customer care line at 833-233-2358, Monday through Friday 8am - 5pm Central Time.

1.5lb CO_2 Cylinder + Regulator

Detailed Spec Sheet

1.5lb CO_2 Cylinder and CO_2 Regulator - Product Specs
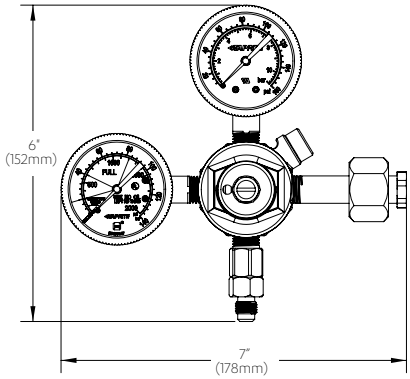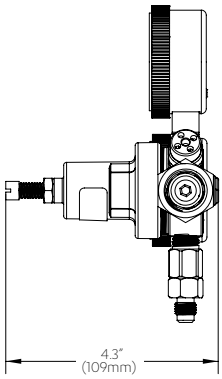
Product Description:	2 x 1.5lb Beverage-Grade Carbon Dioxide Cylinder with Regulator
CO_2 Capacity:	Approximately 400 8oz cups (per canister)
CO_2 Operating Pressure:	Min 39psi - Max 43psi / Min 2.74 - Max 3.02kg/cm^2
CO_2 Height (without regulator):	Approximately 12" / 305mm
CO_2 Diameter:	Approximately 3.2" / 81mm
CO_2 Regulator Height:	Approximately 6" / 152mm
CO_2 Regulator Width:	Approximately 7" / 178mm
CO_2 Regulator Depth:	Approximately 4.3" / 109mm
Valve Type:	CGA-320
Max Height (with regulator)	Approximately 19" / 482mm
Max Width (with regulator):	Approximately 6" / 152mm
Storage Temperature:	CO_2 should be stored out of direct sunlight. Max storage temperature is 120°F (48.8°C)