HydroTap Touch-Free Wave CS Tap

Product Spec Sheet

Chrome

HydroTap Touch-Free Wave Chilled/Sparkling (CS) Tap

Elevate your home hydration with the HydroTap Touch-Free Wave CS Tap and enjoy instant access to filtered chilled and sparkling water from the tap.

This HydroTap Touch-Free Wave can be installed over the sink as a secondary tap or over either of our optional Classic Range Font/Drip Trays (Integrated or Raised).

The HydroTap Touch-Free Wave Chilled/Sparkling is only available in Chrome.

Product Order Codes for HydroTap Touch-Free Wave CS Taps

HydroTap Touch-Free Wave CS Tap in Chrome	01041861

HydroTap Touch-Free Wave CS - Tap Specs

Style:	HydroTap Touch-Free Wave Tap (CS)
Hole Size:	$1\,^{3}/_{8}$" (35mm)
Tap Height:	$8\,^{7}/_{16}$" (215mm) or $13\,^{3}/_{4}$" (350mm) when installed with the optional font
Installation:	Over sink as a secondary tap or on optional font/drip tray
Flow Rate:	Max 1.8 gpm / 6.81 lpm
Sparkling Water Flow Rate	0.4 gpm / 1.51 lpm
Product Certifications:	IAPMO - NSF/ANSI 372, 42, 53, CSA B438.1, ASSE 1087; cUL; CEC
ADA Compliant:	Yes

Please see individual product spec sheets for accessory product specs and order codes.

HydroTap Touch-Free Wave CS Tap

Product Spec Sheet

Installation Requirements

The HydroTap is a pump-driven system so the installation of the Tap must be within 3' (0.9m) of the base command center. Installation on most countertops is straightforward however, some stone countertops may require a specialized cutting service.

If using a drip tray (font) accessory, suitable drainage to a trapped waste is required within 3' (0.9m) of the installation. Sufficient space and clearance to install the HydroTap as detailed in the product installation guidelines is required.

Installation and connection of your HydroTap must be carried out by a qualified person, observing all local, state, & federal regulations.

HydroTap Touch-Free Wave BCS - Tap Drawings

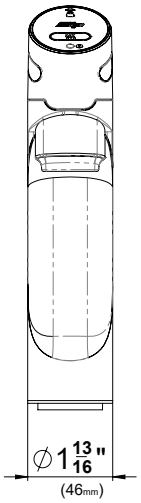

Front View

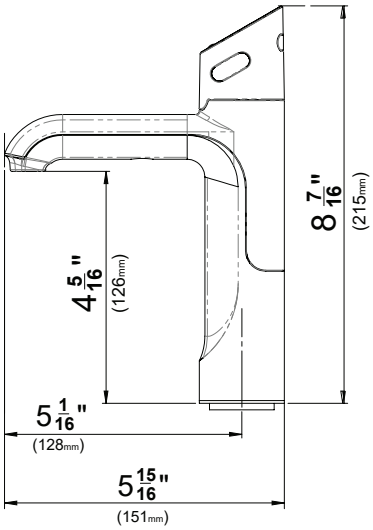

Side View

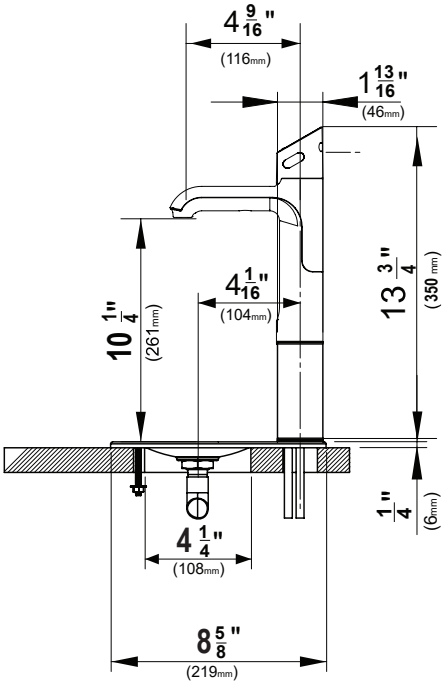

Side View with Integrated Font

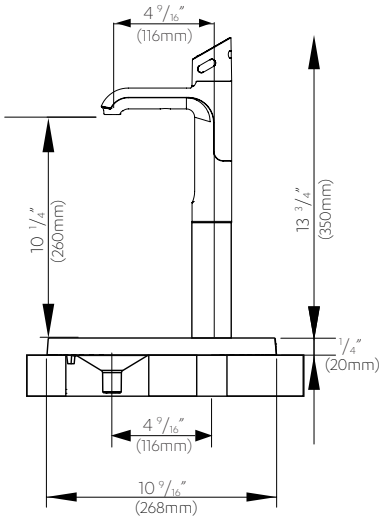

Side View with Raised Font

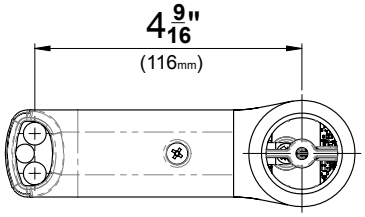

Top View

HydroTap 240V CS G4 Command Center

Product Spec Sheet

HydroTap 240V CS G4 Command Center

Product Order Code: 01034207

Ditch the cans of sparkling and single-use bottles of water when you upgrade your office hydration to a HydroTap CS 240V system. Employees can enjoy on-demand chilled still and chilled sparkling water at work.

This command center is ideal for commercial applications with up to 60 users and can be paired with our Classic Tap, Classic Plus Tap, Elite Plus Tap, Touch-Free Wave Tap, Arc Tap and Cube Tap..

HydroTap 240V CS G4 Command Center - Product Specs

Product Order Code	01034207
Maximum number of users:	Up to 60 people
Water Pressure:	Min 37psi – Max 100psi (2.60 - 7.03kg/cm^2) with a minimum flow rate of 1 gpm (3.79lpm)
Water Connection:	½" BSP - isolation valve is required within 3' (0.9m) of the installation
Integral Water Values:	All HydroTap systems are fitted with a Dual Check Valve and a 50psi (3.52kg/cm^2) Pressure Limiting Valve
Water Supply Requirements:	Potable drinking water supply
Optimal Total Dissolved Solids (TDS) Range:	TDS Min 50ppm – Max 150ppm
Integral Water Filter:	0.2 micron, 1.5 size - replace every 1,800 gallons / 6,813 liters (~6 months for a large office)
Power Rating:	220-240V, 50-60Hz, 15 amp power supply with a NEMA 6-15 outlet
Dimensions (WxDxH):	11" x 18.9" x 13.1" / 280mm x 480mm x 333mm
Minimum Air Gap:	Minimum of 2" / 50mm clearance on left and right side and 8" / 200mm above
Minimum Cabinet Size:	20" wide x 24" deep /508mm wide x 610mm deep
Maximum Hose Connection Length	3' / 0.9m (tap to command center)
Dry Weight:	80.5lbs / 36.5kg
Product Approvals:	IAPMO - NSF/ANSI 372, 42, 53, CSA B483.1, ASSE 1087; cUL; CEC
Warranty:	3 years
Compatible CO_2 Cylinder:	Zip Water 5lb CO_2 with CGA-320 fitting
CO_2 Operating Pressure:	Min 39psi - Max 44psi / Min 2.74 - Max 3.09kg/cm^2

HydroTap 240 CS G4 Command Center

Product Spec Sheet

Installation Requirements

Installation and connection of your HydroTap must be carried out by a qualified person, observing all local, state, & federal regulations. You will require suitable 220 -240V 50-60Hz, 15 amp power supply with a NEMA 6-15 electrical outlet within 5' 9" (1.75m) of the product.

The HydroTap is a pump-driven system so the installation of the Tap must be within 3' (0.9m) of the base command center. The HydroTap is an air-cooled system so discrete cabinetry cut-outs are required for ventilation. Installation on most countertops is straightforward however, some stone countertops may require a specialized cutting service.

If using a drip tray (font) accessory, suitable drainage to a trapped waste is required within 3' (0.9m) of the installation. If you live in an area with hard water (more than 150ppm), we recommend installation of a scale filtration kit or water softener. Sufficient space and clearance to install the HydroTap as detailed in the product installation guidelines is required.

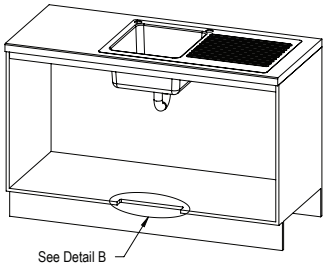

VENTILATION DETAIL

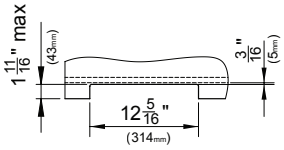

DETAIL B: CABINET FLOOR CUT-OUT

SINGLE PHASE 240V POWER

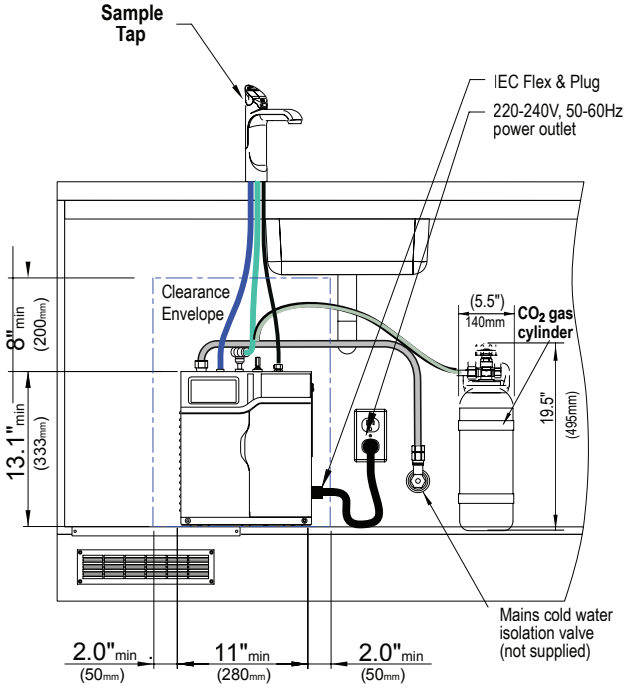

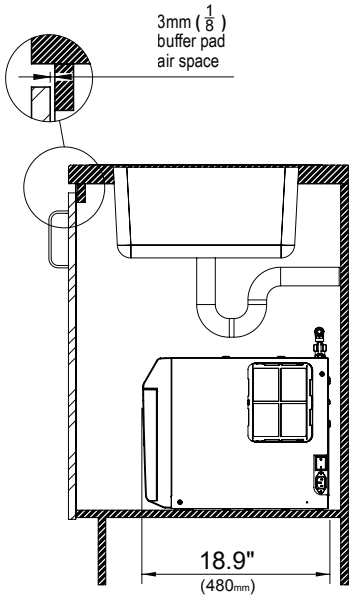

Scan QR code to view installation guide.

Technical Installation assistance over phone or video call can be obtained by calling our customer care line at 1-833-233-2358, Monday through Friday 8am - 5pm Central Time.