HydroTap Touch-Free Wave BC Tap

Product Spec Sheet

HydroTap Touch-Free Wave Boiling/Chilled (BC) Tap

Elevate your home hydration with the HydroTap Touch-Free Wave BC Tap and enjoy instant access to filtered boiling and chilled water from the tap.

The HydroTap Touch-Free Wave can be installed over the sink as a secondary tap or over either of our optional Classic Range Font/Drip Trays (Integrated or Raised).

The HydroTap Touch-Free Wave is available in two finishes: Chrome and and Matte Black with Chrome Accents.

HydroTap Touch-Free Wave BC Tap - Available Finishes

Chrome

Matte Black with Chrome Accents

Product Order Codes for HydroTap Touch-Free Wave BC Taps

HydroTap Touch-Free Wave BC Tap in Chrome	01041860
HydroTap Touch-Free Wave BC Tap in Matte Black with Chrome Accents	01042558

HydroTap Touch-Free Wave BC - Tap Specs

Style:	HydroTap Touch-Free Wave Tap (BC) - includes boiling water safety lock
Hole Size:	$1\,^{3}/_{8}$" (35mm)
Tap Height:	$8\,^{7}/_{16}$" (215mm) or $13\,^{3}/_{4}$" (350mm) when installed with the optional font
Installation:	Over sink as a secondary tap or on optional font/drip tray
Flow Rate:	Max 1.8 gpm / 6.81 lpm
Product Certifications:	IAPMO - NSF/ANSI 372, 42, 53, CSA B438.1, ASSE 1023, ASSE 1087; cUL; CEC
ADA Compliant:	Yes

Please see individual product spec sheets for accessory product specs and order codes.

HydroTap Touch-Free Wave BC Tap

Product Spec Sheet

Installation Requirements

The HydroTap is a pump-driven system so the installation of the Tap must be within 3' (0.9m) of the base command center. Installation on most countertops is straightforward however, some stone countertops may require a specialized cutting service.

If using a drip tray (font) accessory, suitable drainage to a trapped waste is required within 3' (0.9m) of the installation. Sufficient space and clearance to install the HydroTap as detailed in the product installation guidelines is required.

Installation and connection of your HydroTap must be carried out by a qualified person, observing all local, state, & federal regulations.

HydroTap Touch-Free Wave BC - Tap Drawings

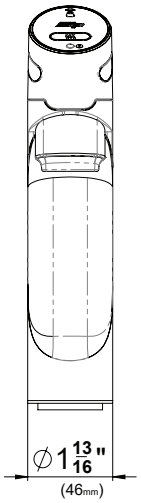

Front View

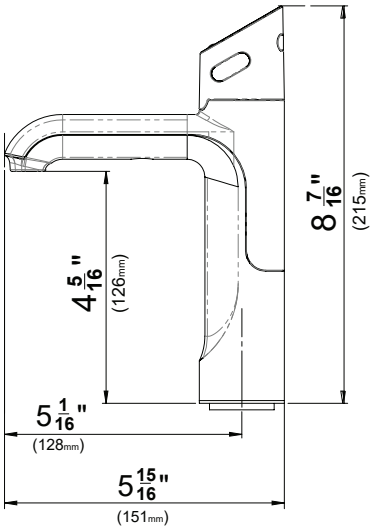

Side View

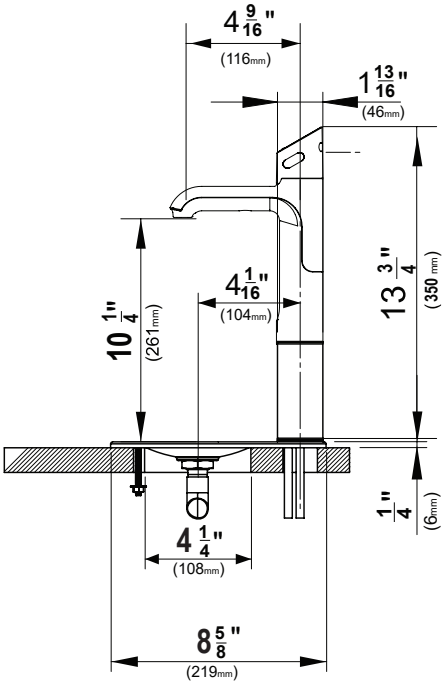

Side View with Integrated Font

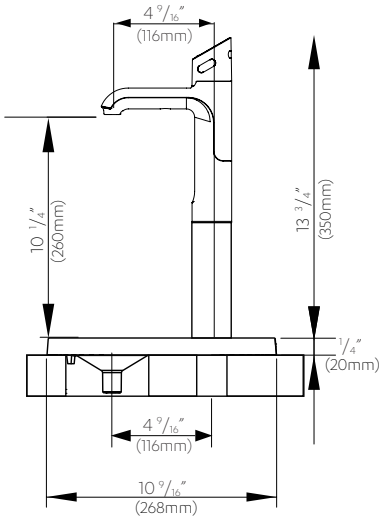

Side View with Raised Font

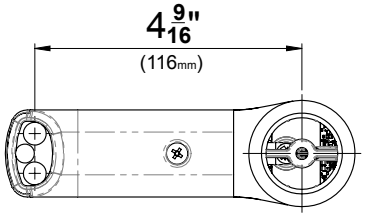

Top View

HydroTap 120V BC G5 Command Center

Product Spec Sheet

HydroTap 120V BC G5 Command Center

Product Order Code: 01043465

The HydroTap by Zip Water is more than just a water system, it's cooking made easy and it's water at its best. That's because the HydroTap 120V BC command center provides users instant access to filtered boiling and chilled water.

This command center is ideal for residential and small commercial applications and can be paired with any of our various tap styles.

HydroTap 120V BC G5 Command Center - Product Specs

Product Order Code	01043465
Water Pressure:	Min 37psi – Max 100psi (2.60 - 7.03kg/cm^2) with a minimum flow rate of 1 gpm (3.79 lpm)
Water Connection:	½" BSP - isolation valve is required within 3' (0.9m) of the installation
Integral Water Values:	All HydroTap systems are fitted with a Dual Check Valve and a 50psi (3.52kg/cm^2) Pressure Limiting Valve
Water Supply Requirements:	Potable drinking water supply
Optimal Total Dissolved Solids (TDS) Range:	TDS Min 50ppm – Max 150ppm
Integral Water Filter:	0.2 micron, 1 size - replace every 1,100 gallons / 4,163 liters or 12 months
Power Rating:	110-120V, 50-60Hz, 15 amp power supply with a NEMA 5-15 outlet
Dimensions (WxDxH):	13.3" x 18.2" x 13.1" / 339mm x 462mm x 333mm
Minimum Air Gap:	Minimum of 2" / 50mm clearance on left and right side and 8" / 200mm above
Minimum Cabinet Size:	18" wide x 24" deep / 457mm wide x 610mm deep
Maximum Hose Connection Length	3' / 0.9m (tap to command center)
Minimum Distance Needed for Installation	15" / 381mm (interior wall to garbage disposal)
Dry Weight:	66lbs / 30kg
Product Approvals:	IAPMO - NSF/ANSI 372, 42, 53, CSA B483.1, ASSE 1023, ASSE 1087; cUL; CEC
Warranty:	3 years

HydroTap 120V BC G5 Command Center

Product Spec Sheet

Installation Requirements

Installation and connection of your HydroTap must be carried out by a qualified person, observing all local, state, & federal regulations. You will require suitable 110 -120V 50-60Hz, 15 amp power supply with a NEMA 5-15 electrical outlet within 5' 9" (1.75m) of the product.

The HydroTap is a pump-driven system so the installation of the Tap must be within 3' (0.9m) of the base command center. The HydroTap is an air-cooled system so discrete cabinetry cut-outs are required for ventilation. Installation on most countertops is straightforward however, some stone countertops may require a specialized cutting service.

If using a drip tray (font) accessory, suitable drainage to a trapped waste is required within 3' (0.9m) of the installation. If you live in an area with hard water (more than 150ppm), we recommend installation of a scale filtration kit or a water softener. Sufficient space and clearance to install the HydroTap as detailed in the product installation guidelines is required.

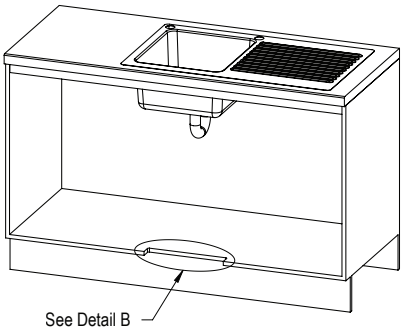

VENTILATION DETAIL

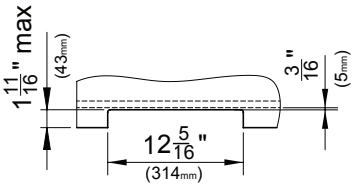

DETAIL B: CABINET FLOOR CUT-OUT

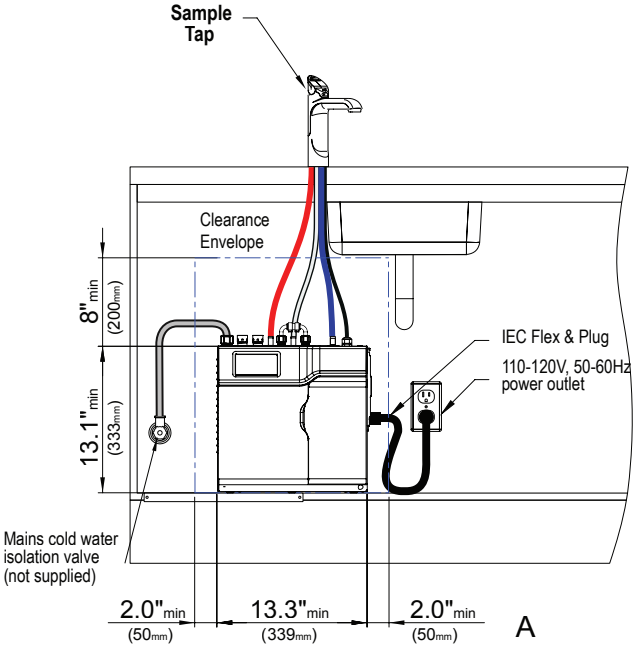

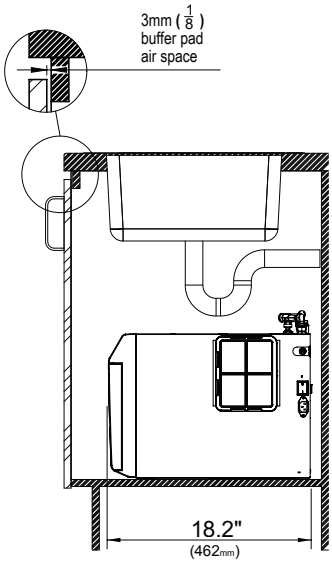

Scan QR code to view installation guide.

Technical Installation assistance over phone or video call can be obtained by calling our customer care line at 1-833-233-2358, Monday through Friday 8am - 5pm Central Time.